FLOW SIGHT GLASS GAUGE
NAC

NAC are used for mounting in small pipes for liquid fluids. The instruments are equipped with female threads at inlet and outlet and can be supplied with either brass fittings.

Technical Data

Material: Body: Brass
Tube Housing: Borosilicate Glass
O-ring: Viton
Thread connection: Brass
Max. Pressure: 10 Bar
Max. Temperature: 70°C
Connection Size: G¼", G⅜" , G½" or NPT available

Dimensions

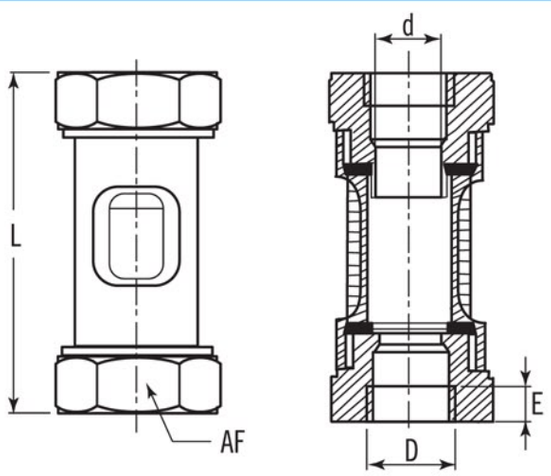

unit=mm

Size	L	AF	D	d	E	Weight (kg)
¼"	70	19	¼	5	12	0.085
⅜"	70	27	⅜	8	12	0.17
½"	80	32	½	12	15.5	0.28

Flow Direction

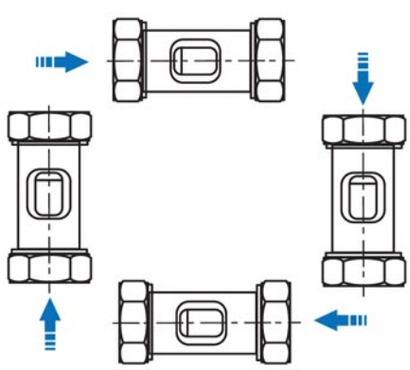

NOTE:
Any direction available.

Ordering Information

NAC	Code	Connection Size
		(1) ¼" (2) ⅜" (3) ½"

Code	Connection Rating-female
	(1) NPT (2) G(BSP)

Code	O-ring Material
V	Viton

NAC				Complete ordering code

USKON AKIŞKAN KONTROL SİSTEMLERİ SANAYİ VE TİCARET LTD. ŞTİ.
Kemankeş Kara MustafaPaşa Mah. Ağaç Tulumba Sok. No: 4/A Karaköy / İstanbul Tel: +90 (212) 251 05 05 Fax: +90 (212) 251 05 79 info@us-kon.com.tr