METAL TUBE FLOW METER BR250S – SPRING TYPE

Vertical Flow Direction

Ex d IIB + H2 T6
工研院字號認証審核中
ITRI/Taiwan certificate examining

HART COMMUNICATION PROTOCOL

PATENT NO.
Taiwan: M338981 / M332936
China: 1187801

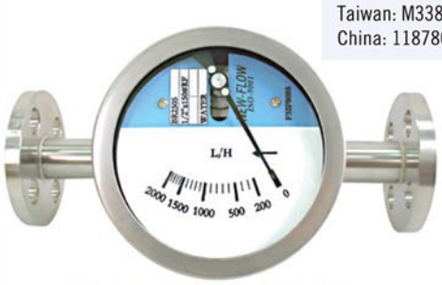

Horizontal Flow Direction

Technical Data

BR250S for high flows of gas, liquid, steam and oil
Case Material: Aluminum alloy case with paint; SS316 available
Body Wetted Parts Material: SS316, others on request, indication via magnetic coupling (no sealed)
Lens Material: Safety Glass
Scales Calibrated: in l/h, m³/h, kg/h, %, etc.
Flow Rates For:
– Water: 30 l/h up to 120,000 l/h (special ranges on request)
– Air: 0.8 Nm³/h up to 1,200 Nm³/h (special ranges on request)
Connection Type: Only Flange Type
Connection Size: ½"~5"
Mounting: Vertical and Horizontal available
Mounting Length: 250mm standard; Connection size bigger than 3": mounting length is 300mm; 300mm for explosion proof.
Protection Class: IP66 or Explosion proof, Class I , Groups B, C & D; Class II, Groups E, F & G; NEMA 4, 7, 9
Accuracy: ±2.5% F.S (±2.0% F.S option)
Max. Pressure: 40 kg/cm² (standard); Option: up to 100 kg/cm²
Temperature: -50°C to +200°C (standard); up to 400°C on request
Alarm Switch: Micro switch, Inductive switch, Reed switch available
LCD Display: available
***HART® Communication:** available
Two Wire Transmitter with HART® Protocol:
–Galvanic Isolation
–Suitable for application in SIL 2 installations

Principle

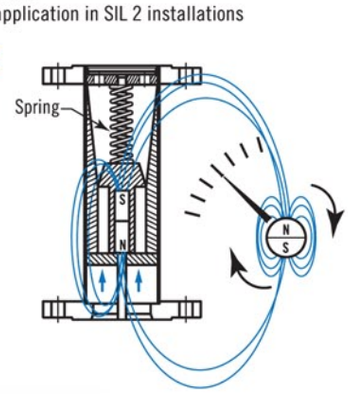

Dimensions-mm

IP66

Case Type: (A-1) Rectangle Bolt Tight Type
Housing Material: Alunimum alloy case with paint

1. Up to 200°C:

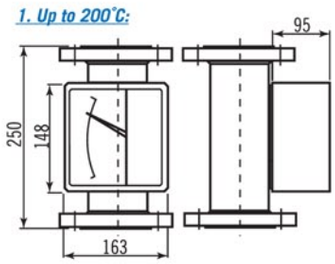

2. Up to 400°C c/w cooling element:

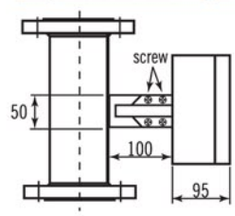

IP66

Case Type: (B-1) Round Bayonet Ring Type (only for indicating)
Housing Material: SS316

1. Up to 200°C:

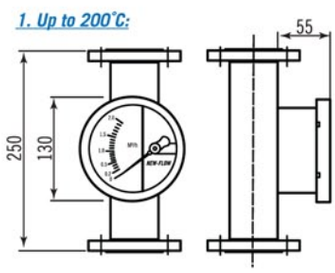

2. Up to 400°C c/w cooling element:

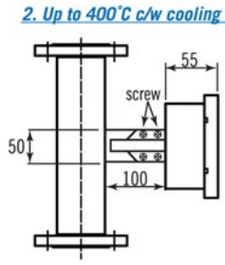

IP66

Case Type: (A-2) Round Screw Tight Type
Housing Material: Aluminum alloy
Case Type: (B-2) Round Screw Tight Type
Housing Material: SS316

1. Up to 200°C:

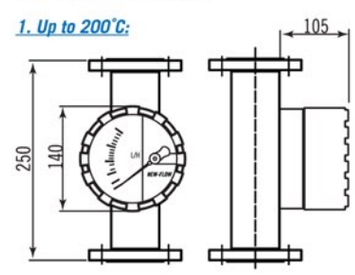

2. Up to 400°C c/w cooling element:

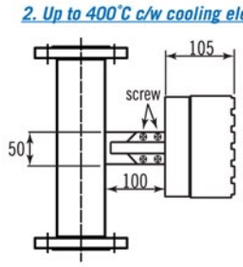

Explosion Proof

Class I, Groups B, C & D; Class II, Groups E, F & G; NEMA 4, 7, 9

II 2 G Ex d IIB + H2 Gb
II 2 D Ex tb IIIC Db IP66

1. Up to 200°C:

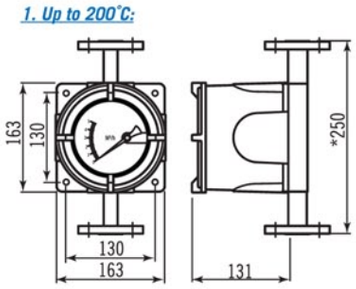

2. Up to 400°C c/w cooling element:

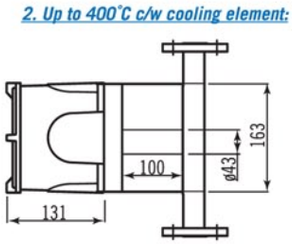

*Mounting length: 250mm standard
Connection size bigger than 3", mounting length is 300mm.

USKON AKIŞKAN KONTROL SİSTEMLERİ SANAYİ VE TİCARET LTD. ŞTİ.
Kemankeş Kara MustafaPaşa Mah. Ağaç Tulumba Sok. No: 4/A Karaköy / İstanbul Tel: +90 (212) 251 05 05 Fax: +90 (212) 251 05 79 info@us-kon.com.tr

Alarm / Analog Output

BR-250S/GS-M (Micro Switch)

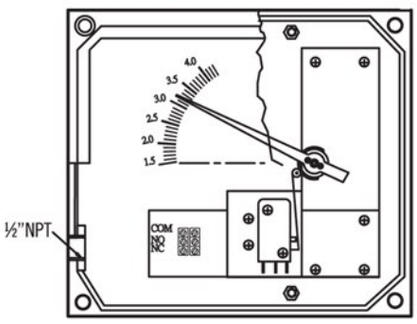

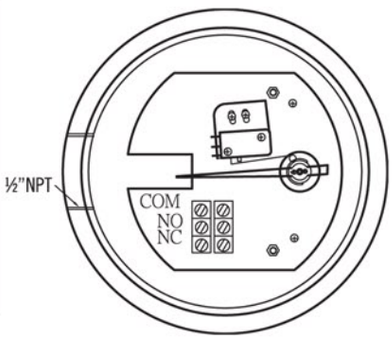

Adjustable Micro Switch, Series BR250S/GS-M
1 adjustable alarm contact
Load: 5A/125VAC, 5A/250VAC, 2A/30VDC
Temperature: -25°C~+100°C (AMB)
Hysteresis: ±10% F.S (Dead Band)

BR-250S/GS-R (Reed Switch)

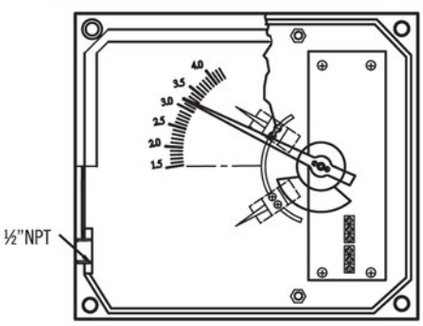

Alarm Switch: One or Two setting point, form A bistable type (N.O type)
Hysteresis: ±10% F.S (Dead Band)
Switch Rating: AC 125V 0.5A / DC 100V 10W / Max. DC 250V< 40mA

1 adjustable alarm
Contact setting point should be within 10% to 100% of F.S
2 adjustable alarm
The second setting point should be a gap 40% from first setting point.

BR-250S/GS-C (Inductive Switch)

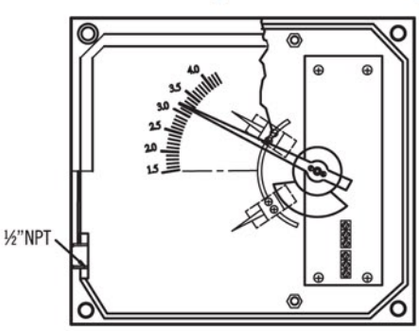

Adjustable inductive alarm switch
Hysteresis: ±1% F.S (Dead Band)
Inductive sensors slotted type: 3.5mm slot switch
DC. voltage 2 wire's to DIN19234 (NAMUR) for use in hazardous areas.

– Power supply: 8 VDC (Ri.approx. 1kΩ)
– Current consumption: Active face uncoved 3mA; Active face coved 1mA
– Ambient temp.: -25°C ~ +100°C

Isolated barriers output relay for inductive sensor:

– Rail mounting
– Control circuit EEx ia IIC
– EMC acc to NAMUR NE21
– Contact loading 250 VAC 2A SPDT 40 VDC 2A

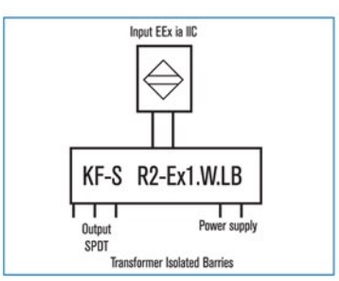

1 adjustable alarm
Contact setting point should be within 10% to 100% of F.S
For 24VDC: KFD2-SR2-Ex1.W
115VAC: KFA5-SR2-Ex1.W
230VAC: KFA6-SR2-Ex1.W

2 adjustable alarm
The second setting point should be a gap 65% from first setting point.
For 24VDC: KFD2-SR2-Ex2.W
115VAC: KFA5-SR2-Ex2.W
230VAC: KFA6-SR2-Ex2.W

BR-250S/GT (Analog Output)

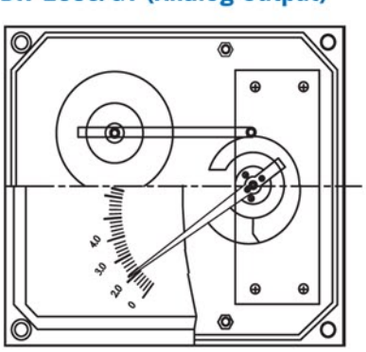

Electric Transmitter BR-250S/GT
Analog output available: 4~20mA (2-wire)
No Alarm Switch Available
Power Supplier: 24VDC
Temperature: +25°C ~ +100°C (AMB)

FLOW

Flow Direction Type

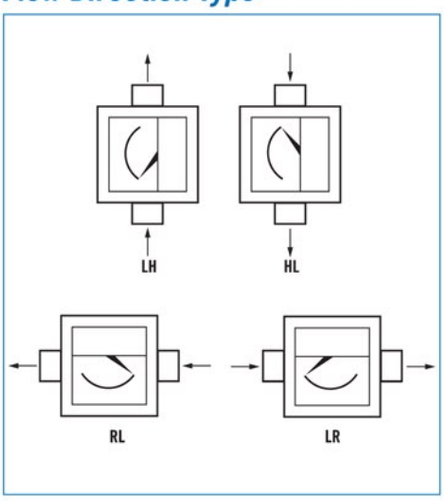

Damping Mechanical (Option Function)

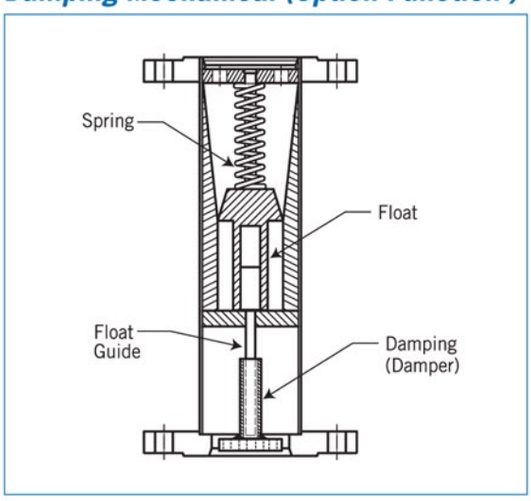

Standard Scales

Tube	L/H 20°C Water	NM^3/H Air 0°C 1.013bar	Pressure Loss psig	Connection	Accuracy
BR250S01	30 ~ 300	0.8 ~ 8	≤3.5	1/2"	±2.5% F.S
BR250S02	40 ~ 400	1 ~ 10	≤3.8	1/2"	±2.5% F.S
BR250S03	50 ~ 500	1.2 ~ 12	≤3.7	1/2"	±2.5% F.S
BR250S04	70 ~ 700	1.7 ~ 17	≤3.6	1/2"	±2.5% F.S
BR250S05	80 ~ 800	2 ~ 20	≤3.8	1/2"	±2.5% F.S
BR250S06	100 ~ 1000	2.7 ~ 27	≤4.0	1/2"	±2.5% F.S
BR250S07	150 ~ 1500	4 ~ 40	≤4.2	1/2"	±2.5% F.S
BR250S08	180 ~ 1800	5 ~ 50	≤4.5	1/2"	±2.5% F.S
BR250S09	150 ~ 1500	4 ~ 40	≤3.8	3/4"	±2.5% F.S
BR250S10	200 ~ 2000	6 ~ 60	≤4.0	3/4"	±2.5% F.S
BR250S11	300 ~ 3000	9 ~ 90	≤3.4	1"	±2.5% F.S
BR250S12	400 ~ 4000	12 ~ 120	≤3.6	1"	±2.5% F.S
BR250S13	600 ~ 6000	15 ~ 150	≤3.9	1"	±2.5% F.S
BR250S14	600 ~ 6000	15 ~ 150	≤3.6	1½"	±2.5% F.S
BR250S15	800 ~ 8000	24 ~ 240	≤3.8	1½"	±2.5% F.S
BR250S16	1000 ~ 10000	30 ~ 300	≤3.9	1½"	±2.5% F.S
BR250S17	1200 ~ 12000	35 ~ 350	≤4.3	1½"	±2.5% F.S
BR250S18	1200 ~ 12000	35 ~ 350	≤3.2	2"	±2.5% F.S
BR250S19	1600 ~ 16000	50 ~ 500	≤3.4	2"	±2.5% F.S
BR250S20	2000 ~ 20000	60 ~ 600	≤3.8	2"	±2.5% F.S
BR250S21	2500 ~ 25000	70 ~ 700	≤4.1	2"	±2.5% F.S
BR250S22	2000 ~ 20000	70 ~ 700	≤3.0	2½"	±2.5% F.S
BR250S23	3000 ~ 30000	80 ~ 800	≤3.2	2½"	±2.5% F.S
BR250S24	3000 ~ 30000	90 ~ 900	≤3.4	3"	±2.5% F.S
BR250S25	4000 ~ 40000	120 ~ 1200	≤3.7	3"	±2.5% F.S
BR250S26	5000 ~ 50000	----------	≤3.6	4"	±2.5% F.S
BR250S27	6000 ~ 60000	----------	≤4.2	4"	±2.5% F.S
BR250S28	10000~100000	----------	≤3.8	5"	±2.5% F.S
BR250S29	12000~120000	----------	≤4.3	5"	±2.5% F.S

NOTE
Performance Technical Data are effective with date of issue and are subject to change without prior notice.

2015.Rev

USKON AKIŞKAN KONTROL SİSTEMLERİ SANAYİ VE TİCARET LTD. ŞTİ.
Kemankeş Kara MustafaPaşa Mah. Ağaç Tulumba Sok. No: 4/A Karaköy / İstanbul Tel: +90 (212) 251 05 05 Fax: +90 (212) 251 05 79 info@us-kon.com.tr

Ordering Information

BR250S	Code	Type
	G	Indicating only
	GS	Indicating + switch
	GT	Indicating 4~20mA (no alarm switch available)
	GTH	Indicating + HART (4~20mA) no alarm switch available

Code	Alarm
0	Without alarm switch
C1	One inductive alarm switch
C2	Two inductive alarm switches
M1	One micro switch
R1	One reed switch
R2	Two reed switches

Code	Housing protection / Case type / Material
A1	IP66 / Rectangle bolt tight type / Aluminum alloy
A2	IP66 / Round screw tight type / Aluminum alloy
B1	IP66 / Round bayonet ring type / SS316 (only for indicating)
B2	IP66 / Round screw tight type / SS316
C	Explosion proof / Aluminum alloy Class I, Groups B, C & D; Class II, Groups E, F & G; NEMA 4,7,9

Code	Body & wetted parts
A	SS316, standard
B	SS316L
O	Option

Code	Float material
A	SS316
B	SS316L
O	Option

Code	Connection rating
5	JIS 5K
10	JIS 10K
20	JIS 20K
15	ANSI 150#
30	ANSI 300#
60	ANSI 600#
90	ANSI 900#
T	Other:_____

Code	Connection size
4F	½" Flange
6F	¾" Flange
10F	1" Flange
12F	1½" Flange
20F	2" Flange
22F	2½" Flange
30F	3" Flange
40F	4" Flange
50F	5" Flange

Code	Transmitter protection
G	IP66 (General type)
Ix.	Intrinsically Safe (EExiaIICT6), IP66 (only for HART)
O	Without transmitter

Code	Fluid
G	Gas
O	Oil
L	Liquid
S	Steam

Code	Range
S	Standard range
	Please directly fill out the flow range in the order code.

Code	Flow Direction
0	LH
5	HL
10	RL
20	LR

Code	LCD Display
D	With
N	Without

Code	Damper
D	With
N	Without

Code	Conduit
1	½"NPT(F)
2	Option

BR250S							+								

NOTE:
1. Custom-made flow range and flange size upon request.
2. Please fill in the ordering information and service condition, and fax this sheet along with your inquiry to 886-7-8225588.

Special instruction, if any:

_____

_____

_____

Service Condition:

Fluid name: _____

Sp. Gr. (density): _____

Viscosity: _____

Press.: _____

Temp.: _____

Full scale: _____

USKON AKIŞKAN KONTROL SİSTEMLERİ SANAYİ VE TİCARET LTD. ŞTİ.
Kemankeş Kara MustafaPaşa Mah. Ağaç Tulumba Sok. No: 4/A Karaköy / İstanbul Tel: +90 (212) 251 05 05 Fax: +90 (212) 251 05 79 info@us-kon.com.tr