Model 1216HP

TECHNICAL DATA SHEET

Description

Type	Safety and Relief valve
Connections	Threaded BSP / NPT
Rating	PN-250&400
Material	Stainless steel 316 L
Temperature range	-10 to +350ºC
Cryogenic service until	-196ºC

Requirements

Calculation	EN-4126-1 / 7
Design	EN-12516-1, EN-4126-1 / 7
	DIN 259 and ANSI B2.1
Materials	EN
Inspection	EN-4126-1 / 7

Construction and materials

Item	Description	Material	
		Standard	Cryogenic
1	Nozzle	SA 351 CF-3M	SA 351 CF-3M
2	Body	SA 351 CF-3M	SA 351 CF-3M
4	Cap	SA 351 CF 8	SA 351 CF 8
5 ○	Disc	316 L SS+ Stellite	
6	Guide	SA 351 CF-3M	SA 351 CF-3M
7	Push Road	316 L SS	316 L SS
8	Spring Button	303 SS	303 SS
9	Ajusting Screw	303 SS	303 SS
10	Tensor Nut	303 SS	303 SS
11 ○	Spring	303 SS	17 / 7PH
12	Lever	SA 351 CF 8	SA 351 CF 8
17	Release nut	306 L SS	306 L SS
18 ○	Lever axis	303 SS	303 SS
19	Packing lever axis	303 SS	303 SS
20 ○	Gasket	PTFE	PCTFE
21 ○	Gasket	PTFE	PCTFE
22 ○	Gasket	Viton	PCTFE
28			

○ Recommended spare parts

Palanca manual
Lifting device

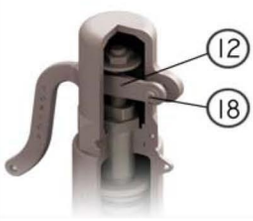

T. Prueba
Test gag

Palanca estanca
Sealed packing lever

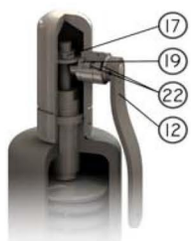

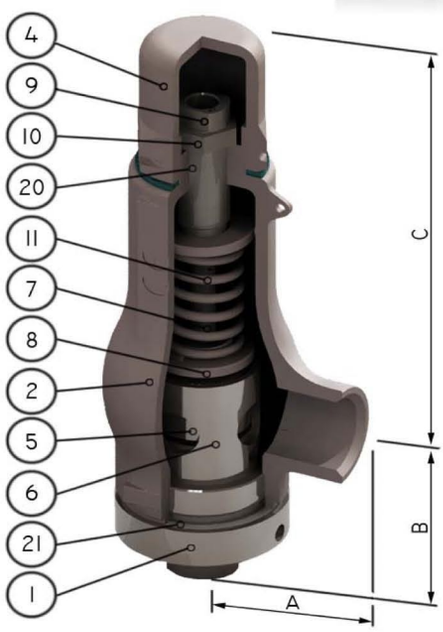

Technical information

Applications	Steam, gases, vapours and liquids
Min. Set pressure	0,2 barg
Overpressure	10%
Blowdown	Gases 10%, liquids 20%
Tolerance Set pressure	± 3%
Discharge coefficients	k= 0,5 for gases k= 0,4 for liquids

Dimensions

Inlet	Outlet	Orifice	Area (mm^2)	A (mm)	B (mm)	C (mm)	Weight (kg)
PN250	**PN160**						
1/2"	**3/4"**	9	64	45	57	155	3
3/4"	**3/4"**	9	64	45	57	155	3
1"	**1"**	9	64	45	57	155	3
PN400	**PN160**						
1/2"	**3/4"**	6	28	45	57	155	3
3/4"	**3/4"**	6	28	45	57	155	3
1"	**1"**	6	28	45	57	155	3

ISO 9001
PED 97/23/EC
BUREAU VERITAS

CE 1035
0163

USKON AKIŞKAN KONTROL SİSTEMLERİ SANAYİ VE TİCARET LTD. ŞTİ.
Kemankeş Kara MustafaPaşa Mah. Ağaç Tulumba Sok. No: 4/A Karaköy / İstanbul Tel: +90 (212) 251 05 05 Fax: +90 (212) 251 05 79 info@us-kon.com.tr